User Manual /

Disabled Persons Toilet Alarm (DPTA)



DPTA-KIT1

Date: 4/11/2026 Issue 1.8

Contents

Section 1 Introduction	**3**
Section 2 Features	**4**
Section 3 Typical Installation	**5**
Section 4 Product Specifications	**6**
Section 5 Electrical Requirements	**10**
Section 6 Wiring Diagram	**11**

1 Introduction

This Disabled Persons Toilet Alarm Kit is available in 1, 2, 3 or 4 zones (where one zone is used for each toilet). It has been designed for use in disabled persons dwellings typically for disabled toilets where this design process considered the requirements of BS8300.

The system consists of a 4 zone control panel (DPTA-CP) which is (for each zone) connected to a Pull Cord (DPTA-PC), Remote Reset (DPTA-RR) and Remote Indicator (DPTA-RI). These connected items are known as field devices which provide the Control Panel with the necessary input and output signals to allow the system to function. These field devices are categorised as follows;

✓ Pull Cords (DPTA-PC) are “Call Devices” which are ceiling mounted pull cords used to generate an alarm activation by a person in distress or requiring attention from a carer. When a call devices is activated the system will generate an alarm and the Remote Indicator (DPTA-RI) will illuminate & sound.



✓ Remote Resets (DPTA-RR) are “Reset Devices” which are generally wall mounted and consist of a push button which is pressed to cancel an alarm activation**. Note that alarms must be reset via the remote reset to comply with the British Standards.**



✓ Remote Indicators (DPTA-RI) are “Warning Devices” that are generally wall mounted devices. During an alarm activation they will provide a visual and audible indication to alert carers / staff of a person requiring attention.



✓ The control panel (DPTA-CP) is powered by mains supply, and should you require battery backup then this must be facilitated from an external power supply. **The reset function of this control panel can be enabled or disabled, kindly refer to Section 4 – Reset Functionality**

NOTE: An alternative version of the control panel (DPTA-R) has a volt free relay output. This version should be used if the system has to report an alarm to a 3rd party monitoring system.



2 Features

- Simple 3 wire operation for all field devices
- Control Panel supporting up to 4 zones
- Simple maintenance and fault diagnosis.
- On board buzzer in both Control Panel & Remote Indicator
- Zone LED indication on Control Panel
- Full range of field devices available (i.e. Pull Cord, Remote Reset & Remote Indicator)
- System silence/mute option from Control Panel
- Remote (at Remote Reset) reset options

Part Numbers

The DPTA system is generally sold as a kit, which includes the control panel, field devices for one zone, and a disabled sticker. But is also available as separate parts

Product Code	Description
DPTA-KIT1	Disabled Toilet Alarm - 1 Zone Kit
DPTA-KIT1/R	Disabled Toilet Alarm - 1 Zone Kit with Relay Output
DPTA-CP	Disabled Toilet Alarm - Control Panel
DPTA-R	Disabled Toilet Alarm - Control Panel with Relay Output
DPTA-PC	Disabled Toilet Alarm - Pull Cord with two handles
DPTA-RI	Disabled Toilet Alarm - Remote Indicator
DPTA-RR	Disabled Toilet Alarm - Remote Reset
DPTA-S	Disabled Toilet Sticker
DPTA-PC-CH	Disabled Toilet Alarm Pull Cord Replacement Cord & Handle

3 Typical Installation

The following illustration shows how the Control Panel and field devices are connected in a typical installation for a single toilet;

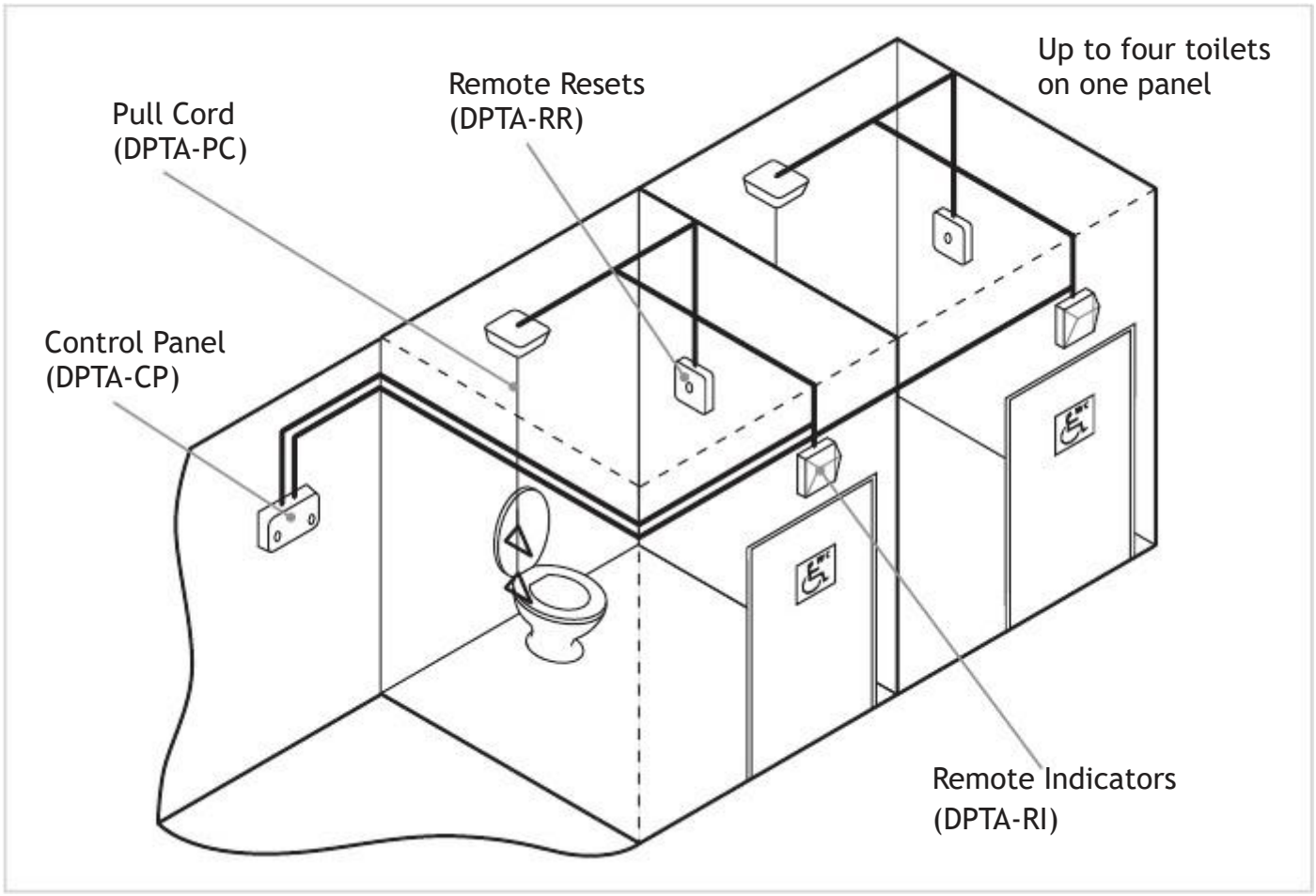

4 Product Specifications

4.1 DPTA-CP – Control Panel (Surface/Flush Mounted)

a. Power Supply

Supply Voltage	230VAC 50Hz/60Hz	12V DC (From external Power Supply)
Quiescent Standby Current	0.2mA AC	3mA DC
Maximum Overall Alarm Current	60 mA @ 23V AC (All 4 circuits in alarm	250 mA @ 12V DC (All 4 circuits in alarm)

b. Button Functions

Reset Function **Disabled** (see Section 4.5 Reset Functionality)

Button	**System Status**	**Operation**	**Function**
Silence	Alarm activation	Press for 0.5 seconds	Mute control panel
Reset	Alarm activation	N/A	N/A
Zone 1	Alarm activation	N/A	N/A
Zone 2	Alarm activation	N/A	N/A
Zone 3	Alarm activation	N/A	N/A
Zone 4	Alarm activation	N/A	N/A

By default, the reset button functionality is disabled. But can be enabled by the user if required.

Reset Function **Enabled** (see Section 4.5 Reset Functionality)

Button	**System Status**	**Operation**	**Function**
Silence	Alarm activation	Press for 0.5 seconds	Mute control panel
Reset	Alarm activation	Press for 0.5 seconds	Reset all zones*
Zone 1	Alarm activation	N/A	N/A
Zone 2	Alarm activation	N/A	N/A
Zone 3	Alarm activation	N/A	N/A
Zone 4	Alarm activation	N/A	N/A

c. LED's

LED	System Status	LED Response
Mains - Green	Mains On	Constant: Mains Present
Alarm (Zone 1, 2, 3, 4) - Red	Alarm Activation	Slow Flashing – 1 Hz

d. Internal Buzzer

Type	Piezo (PCB Mounted)
Current	5mA maximum
Frequency	1 kHz Tone
Sound	1 Hz Pulse (Alarm Activation) Mute (System Normal)

e. Monitoring Circuits

Number of Monitoring Circuits	4
Monitoring Voltage	12V DC +/- 10%
Alarm trigger	Pull cord operation
Maximum alarm current (per circuit)	60mA (for Pull cord, Remote indicator and remote reset connected)
Alarm indication (Control Panel)	Flashing Zone indication and intermittent Buzzer (1 Hz)
Alarm indication (Remote Indication)	Flashing LED indication and intermittent Buzzer (1 Hz)
Alarm indication (Pull cord)	Flashing LED indication and intermittent Buzzer (1 Hz)
Alarm indication (Remote Reset)	Flashing LED indication (1 Hz)
Alarm reset	Pressing remote Reset

f. Fuses

AC Input Fuse	500mA Anti Surge 20mm Glass
DC Input Fuse	500mA Anti Surge 20mm Glass

g. Housing

Front Cover	Polycarbonate – Flame Retardant (UL 94-V-2)
Back Box	Polycarbonate – Flame Retardant (UL 94-V-2)
Maximum Current During Alarm	30 mA DC (Maximum)

4.2 DPTA-PC – Pull Cord (Ceiling Mounted)

a. Power Supply

Input Voltage	12 VDC
Quiescent Standby Current	0mA
Maximum Current During Alarm	15 mA DC (Maximum)

b. User Operation

Action	Response
Pull Card	Alarm Activation

c. LED Operation

LED	System Status	LED Response
Front Mounted	Alarm Activation	Illuminates in sync with the control panel LEDs

d. Termination

Device is wired with 3 wires in (positive, negative & signal) and 3 wires out (positive, negative & signal).

e. Housing

Material	ABS (UL 94 HB)
Colour	White

4.3 DPTA-RR – Remote Reset (Surface/Flush Mounted)

a. Power Supply

Input Voltage	12 VDC
Quiescent Standby Current	0mA
Maximum Current During Alarm	15 mA DC (Maximum)

b. User Operation

Action	Response
Push Button	Alarm Reset

c. LED Operation

LED	System Status	LED Response
Front Mounted	Alarm Activation	Illuminates in sync with the control panel LEDs

d. Termination

Device is wired with 3 wires in (positive, negative & signal) and 3 wires out (positive, negative & signal).

e. Housings

Material	ABS (UL 94 HB)
Colour	White

4.4 DPTA-RI – Remote Indicator (Surface/Flush Mounted)

a. Power Supply

Input Voltage	12 VDC
Quiescent Standby Current	0mA
Maximum Current During Alarm	30 mA DC (Maximum)

c. LED

LED	System Status	LED Response
Front Mounted	Alarm Activation	Illuminates in sync with the control panel LEDs

d. Termination

Device is wired with 3 wires in (positive, negative & signal) and 3 wires out (positive, negative & signal).

e. Housings

Material	ABS (UL 94 HB) / Polycarbonate – Flame Retardant (UL 94-V-2)
Colour	White / Transparent

4.5 Reset Functionality

Depending upon your local requirements the DPTA-CP has a selectable jumper which can either enable or disable the reset functionality on the control panel (DPTA-CP). As you look at the PCB on the reverse of the DPTA-CP cover, you will see a jumper labelled "Jump 2", if the jumper is positioned on the 2 pins adjacent to "Enabled" then the reset buttons are enabled. And if it is on the 2 pins adjacent to "Disabled" then the reset is disabled.

5 Electrical Requirements

A. Power Supply

Mains Powered	DC powered from an external PSU
230V AC at 50/60Hz	12V DC +/- 10%
Standby Current : 0.2mA	Standby Current : 3mA
Alarm Current : 60mA (max)	Alarm Current : 250mA (max)

B. DPTA-CP Internal Safety Fuses

Mains Input Fuse – 500mA, Anti Surge / Timed.
The mains input Fuse protects the DPTA-CP circuitry, field devices and field device wiring from current overload.

12V DC Input Fuse – 500mA, Anti Surge / Timed.
The DC input Fuse protects the DPTA-CP circuitry, field devices and field device wiring from current overload.

The field device wiring is also protected with electronic current limiting.

6 Wiring Diagram

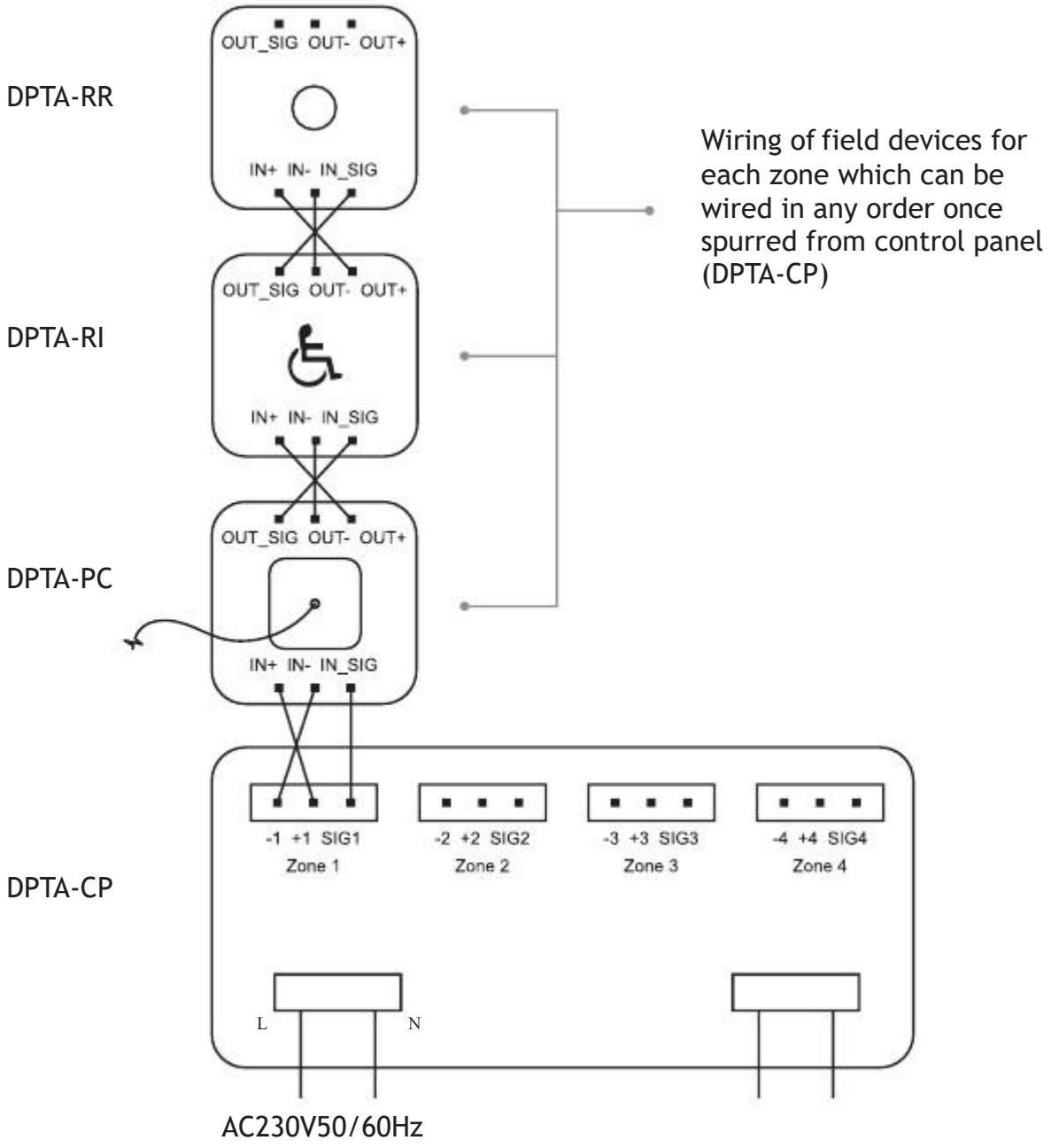

Maximum cable run

Using a 4 core burglar alarm type cable for the field wiring, the recommended maximum distance is 50m.

Using a 1mm cable, the maximum recommended distance is 100m.